SS1PTZD-33x3M Series

Stainless Steel Weatherproof Dual PTZ Camera Station

Integrated with 3MP 33x Optical Zoom Optical Zoom Sony Sensor Camera + Thermal Camera (384x288 or 640x480) Module

SS1PTZD-LEDW-G

SS1PTZD-W-G

Main Features

AISI316L

Marine grade AISI316L Stainless Steel material

IP

IP 66 / 68

IK 10

Vandal-proof IK10 ratings

Fitted with wiper mechanism

3MP Resolution 33x optical zoom lens

384x288 or 640x480 resolution for thermal camera module

PoE++

Option for IEEE 802.3bt PoE++ (90Watt)

IR

Option for LED illuminator available

Specifications subject to change without notice. © Ventionex, all rights reserved.

Technical Data

General		
Protection Level	IP 66 / 68, TVS 6000V Lightning Protection, Surge Protection and Voltage Transient Protection	
Operating Temperature	-40°C to 60°C	
Relative Humidity	≤95%	
Mechanical		
Body Material	Stainless steel 316L material	
Sight Glass Material	Window with hardened mineral clear tempered glass	
	Window with Germanium glass (for SS1PTZD-G models)	
Pan & Tilt Speed	Variable speed option: 0.1^{0}/s to 45^{0}/s	
Pan & Tilt Movement	Pan: 360° continuously	Tilt: -90° ~ +90°
Overall Dimension (WxHxD)	*Please refer to overall dimension drawings of each model.*	
Cable Entries	1 x M25 (optional additional cable entry upon request)	
Weight	Approximate 40KG	
Electrical		
Operating Voltage	AC110-240V (0.5A – 1.10A), 50/60Hz Optional: IEEE 802.3bt PoE++(90W)	
Power Consumption	Max 110W (110V), Max 120W (240V)	
Thermostatically Controlled Heater	T°C on: <10°C, T°C off: >10°C	
Optional		
LED Illumination	Up to 200 meters (for SS1PTZ-LEDW model)	
Accessories		
Standard	Sunshield for Camera Housing	
Optional	Wall Bracket, Sunshield for Pan & Tilt Body, Pole Top Mounting Adapter	

Specifications subject to change without notice. © Ventionex, all rights reserved.

IP Camera/Lens

Camera		
Day/Night	Automatically removable IR-cut filter	
Shutter Time	1~1/10K s	
Noise Reduction	2DNR, 3DNR, NR by motion	
Image Settings	Color, Brightness, Sharpness, Contrast, White Balance, Exposure Control, Masking, Text Overlay	
Corridor Mode	Corridor Mode 90°, 180°, 270° rotation	
Image		
Image Sensor	1/2.8" Progressive CMOS	
Effective Pixels	HxV = 2065x1553 (3MP)	
Pixel Size	2.5 μm	
Lens	f =4.6 mm (wide) to 152.0 mm (tele), F1.6	
FOV	Horizontal: 55° (wide), 2° (tele)	Vertical: 43° (wide), 1.0° (tele)
Zoom	33x Optical Zoom, Up to 10x Digital Zoom	
Min. Illumination	Color: 0.04Lux	B/W: 0.002Lux
Frame Rate (Maximum)	H265: HDR 3M @30fps + 720p @30fps	
	H264: HDR 3M @30fps + 720p @30fps	
	MJPEG: 1080p @30fps	
Compression Standard		
Video Compression	H.265/H.264/MJPEG	
Video Streaming	Up to 4 individually configurable streams in H.265/ H.264/ MJPEG Configurable resolution/ frame rate/ bandwidth LBR/ VBR/ CBR in H.265/ H.264	
Network		
Security	User Authentication/ HTTPS/ IP Filter/ IEEE 802.1x	
Supported Protocols	ARP, PPPoE, IPv4/v6, ICMP, IGMP, QoS, TCP, UDP, DHCP, UPnP, SNMP, SMTP, RTP, RTSP, HTTP, HTTPS, FTP, NTP, DDNS	
ONVIF	Profile S/ G/ Q/ T conformant	
System Integration		
Analytics	Motion Detection/ Tampering	
General		
Storage	Support for microSD/ microSDHC/ microSDXC card (up to 512GB) Support for recording to NAS	

**Analog camera and other camera module options are available upon request.*
**Thermal camera options are available for G model. Please contact us for the details*

Specifications subject to change without notice. © Ventionex, all rights reserved.

Thermal Camera/Lens

	384	640
Type	Uncooled FPA	
Resolution	384x288	640x480
Pixel pitch	17μm	
NETD	≤80mK@F1, 300K, 50Hz	
Field Frequency	50Hz	
Spectral range	8 – 14 μm	
Lens	Options: 9mm, 13mm, 25mm, 37mm, 42mm	Options: 7.5mm, 9mm, 15mm, 18mm, 30mm, 37mm
Brightness/Gain Adjustment	Yes	
Polarity Inversion	Reverse color	
Digital Zoom	Up to 4x Zoom	
Image Enhancement	Yes	
Calibration	Manually calibrate, Automatically calibrate during power on	
Rolling-over/mirror	On/Off	
Display	Varieties of pseudo color labels (firefighting color, iron hot, red hot, amber, white hot, black hot, etc.)	
Focus	Manual/Auto	
Pan & Tilt Control	Yes	
Storage	Support Micro SD, up to 64G, local storage, NAS (NFS, SMB support) / FTP protocol	
OSD	Time, date, channel number, channel name and custom text, temperature measurement information	
Recording Mode	Mobile Surveillance, Alarm Recording (Gray, highest temperature, areas, alarming cross the lines, etc.), network disconnect recording, timing recorded	
Raw Thermal Image Output	25fps, in the back end manually capture the signal frame raw image and data, the raw image can be analyzed and measured temperature	
Ethernet	RJ-45 (10/100BASE-T)	
Video Compression Format	H.264, Motion JPEG	
Resolution	640x480 / 384x288	
Max Frame Rate	H.264: 30fps MJPEG: 640x480: 15fps	
Video Quality Modulation	H.264: Compression degree, target bite rate degree control	
Bit Rate Control Way	H.264: CBR or VBR	
IP	IPv4	
Protocol	TCP/IP, UDP/IP, RTP(UDP), RTP(TCP), RTCP, RTSP, NTP, HTTP, HTTPS, SSL, DHCP, FTP, ICMP, IGMP, ARP, DNS, DDNS	
Safety	HTTPS(SSL) Login Verification, Class Login Verification, IP address filter, user access log, 802.1x ID Verification	
Applied Program Interface	ONVIF Profile S	
Web Browser	Microsoft Internet Explorer (Version 9~11)	
Temperature Detection Range	Normal temperature range: -20°C ~ 180 °C High temperature range: 100°C ~ 600 °C (-H Model, Please specify upon order)	
Accuracy	±2°C or ±2%	
Mode	Supports 3 movable points, 3 movable areas (highest temperature, lowest temperature, average temperature measurement)	
Emissivity Correction	0.01 ~ 1.0 adjustable	
Alarm Output	Switch output	
Protocol Output	SDK alarm protocol output, ONVIF alarm information output	

Specifications subject to change without notice. © Ventionex, all rights reserved.

Resolution	Lens (mm)	FOV	Detection (m)	Recognition (m)
640×480	Fixed			
	9	62.3° x 48.8°	291	146
	25	24.6° x 18.5°	809	404
	37	16.7° x 12.6°	1197	599
	Motorized			
	13	45.4° x 34.8°	421	210
	25	24.6° x 18.5°	809	404
	42	14.8° x 11.1°	1359	679
384×288	Fixed			
	9	39.9° x 30.4°	291	146
	18	20.6° x 15.5°	582	291
	37	10.1° x 7.6°	1197	599
	Motorized			
	7.5	47.0° x 36.2°	243	121
	15	24.6° x 18.5°	485	243
	30	12.4° x 9.3°	971	485

Lens Comparison Table

Our Technology

✓ RADIOMETRIC FUNCTIONS FOR MEASURING TEMPERATURE

The integrated thermal camera can have up to a maximum of 6 Area Measures, 6 Point Measures and 3 Line Measures. The different type of measures can accommodate different type of thermal monitoring. Area Measures and Line Measures monitor the maximum, minimum and average temperature with precise temperature detection. Point Measures monitor the temperature on its exact location. The device can be configured so that it independently generates a Radiometric Alarm and/or Warning. This function is particularly useful when Monitoring Industrial Processes.

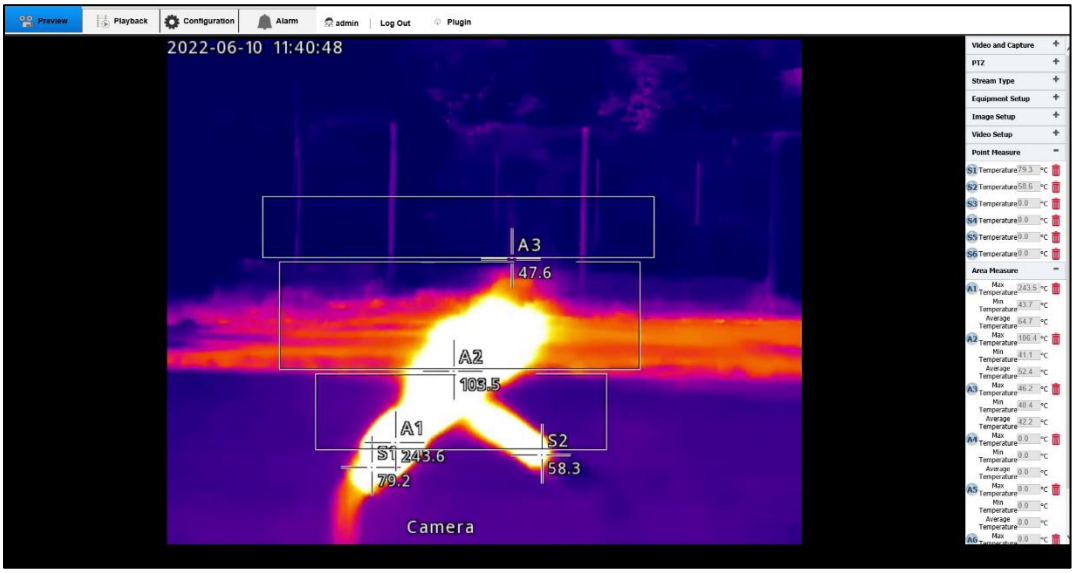

Configurations for Radiometric Temperature Measurement

Specifications subject to change without notice. © Ventionex, all rights reserved.

Outline Dimensions (mm)

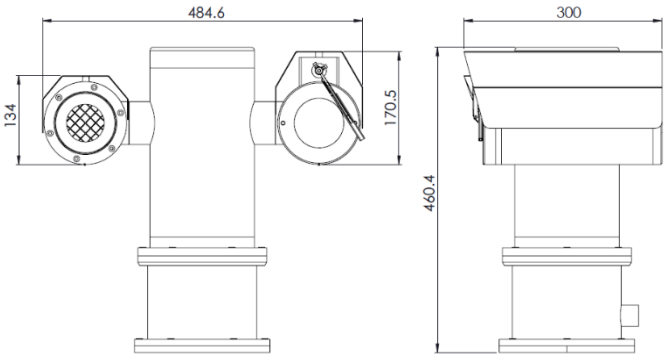

SS1PTZD-W-G Outline Dimensions

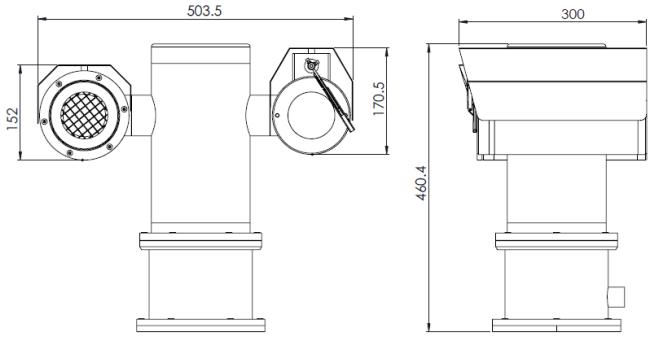

SS1PTZD-W-GL Outline Dimensions

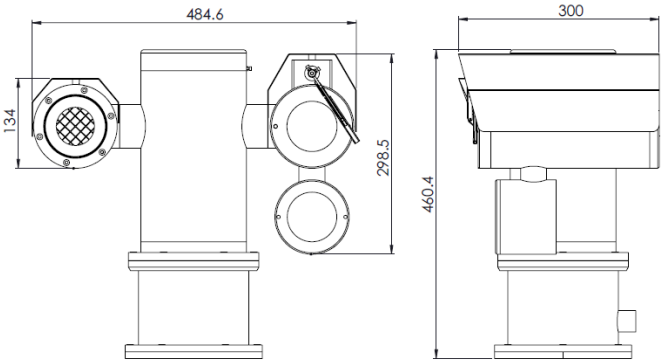

SS1PTZD-LEDW-G Outline Dimensions

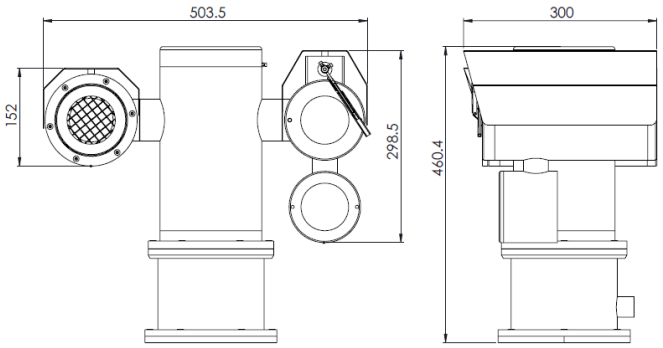

SS1PTZD-LEDW-GL Outline Dimensions

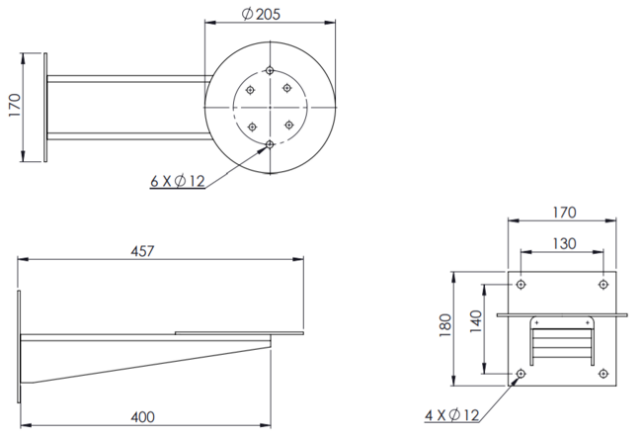

WB-SS1PTZ – Wall Bracket Outline Dimensions

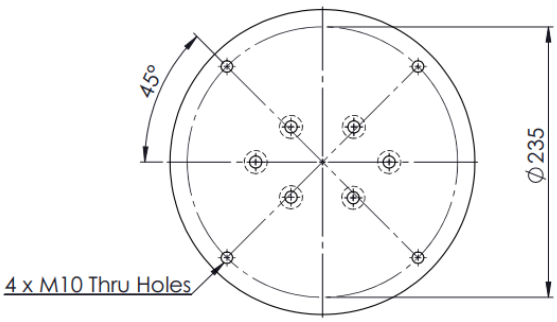

PTA-SS1PTZ – Pole Top Mounting Adapter Outline Dimensions

Specifications subject to change without notice. © Ventionex, all rights reserved.

Model & Ordering Code

SS1PTZD – X – X – 33x3M – X – X – X – X

Camera Station Options
W : Fitted with wiper
LEDW : With LED Illuminator and Wiper

Camera Station Options
G : With Germanium Window and Front Guard
GL : Large Diameter (143 mm) with Germanium Window and Front Guard

Thermal Camera Module Options
384 : 384x288 resolution
640 : 640x480 resolution

POE Options
Blank : No additional option
POE : POE++

Detection Mode Options
Blank : Normal Temperature
H : High Temperature

Thermal Camera Focal Length Options
7.5 : 7.5 mm motorized lens
13 : 13 mm motorized lens
15 : 15 mm motorized lens
25 : 25 mm motorized lens
30 : 30 mm motorized lens
42 : 42 mm motorized lens
9 : 9 mm fixed lens
18 : 18 mm fixed lens
25 : 25 mm fixed lens
37 : 37 mm fixed lens

**Please refer fixed lens comparison table above.*

Standard Accessories

SCH-SS1PTZD : Sunshield for Camera Housing

Optional Accessories

WB-SS1PTZ : Wall Bracket
SPT-SS1PTZD : Sunshield for Pan & Tilt Body
PTA-SS1PTZ : Pole Top Mounting Adapter

Specifications subject to change without notice. © Ventionex, all rights reserved.